1

BSH.8.13 WITH P, T AND A, B REAR 1" BSP

BSH	Single plate for piloted valve
8	CETOP 8/NG25
13	1" BSP rear connectors
00	No variant
1	Serial No.

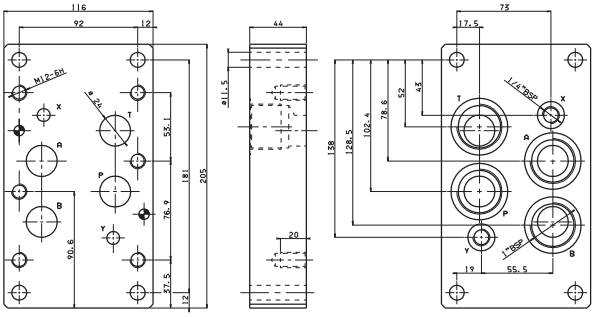

Weight: 6,3 Kg - Fixing screws M10x60 UNI 5931

BSH.8.13* WITH P, T AND A, B REAR 1"1/4 BSP OR 1" 1/2 BSP

BSH	Single plate for piloted valve
8	CETOP 8/NG25
13*	**A** = 1"1/4 BSP rear connectors **B** = 1"1/2 BSP rear connectors
00	No variant
1	Serial No.

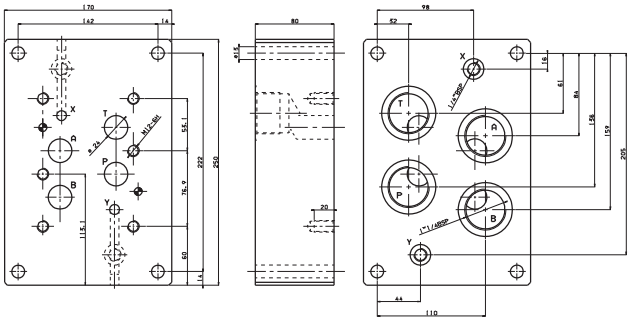

Weight: 21,7 Kg (BSH.8.13A) - Weight: 21,2 Kg (BSH.8.13B)
Fixing screws M12x100 UNI 5931

BSH.8.15 WITH T, P AND A, B SIDE 1" BSP

BSH	Single plate for piloted valve
8	CETOP 8/NG25
15	1" BSP side connectors
00	No variant
1	Serial No.

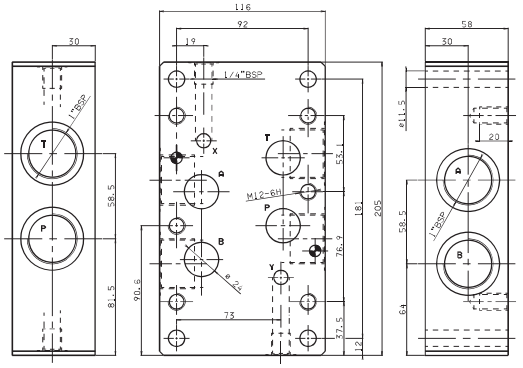

Weight: 8,2 Kg
Fixing screws M10x75 UNI 5931

BSH.8.17 WITH P AND T REAR, A AND B SIDE 1" BSP, X AND Y REAR

BSH	Single plate for piloted valve
8	CETOP 8/NG25
17	1" BSP rear and side connectors
00	No variant
1	Serial No.

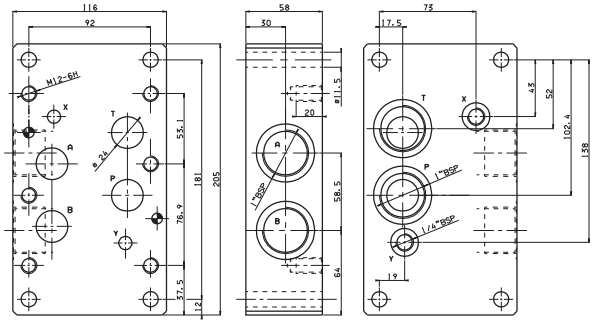

Weight: 8,3 Kg - Fixing screws M10x75 UNI 5931