BM560 CONNECTED IN PARALLEL WITHOUT PRESSURE RELIEF VALVE

Type	A	B	Weight(Kg)
BM560/2	175	159	10
BM560/3	250	234	14,2
BM560/4	325	309	18,4
BM560/5	400	384	22,6
BM560/6	475	459	26,8
BM560/7	550	534	31
BM560/8	625	609	35,2

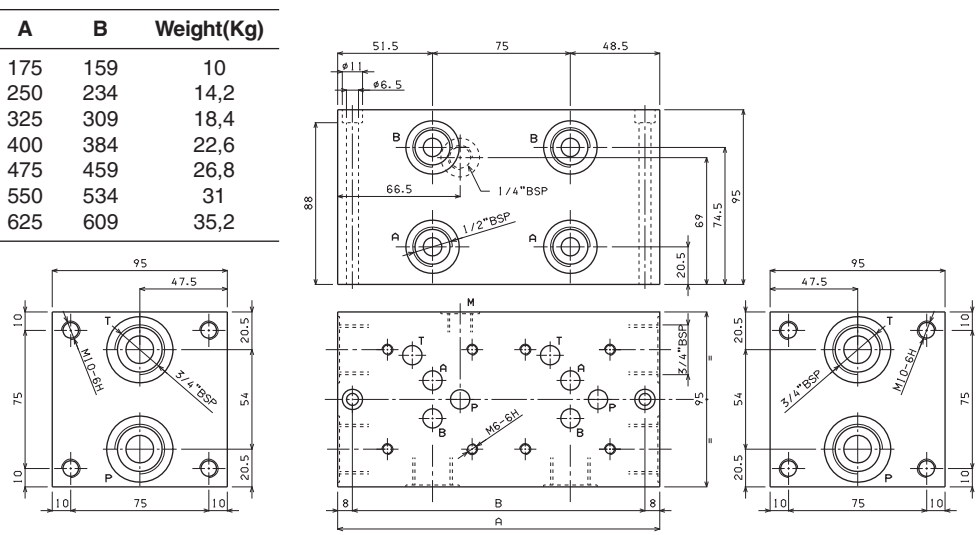

Fixing screws M6x100 UNI 5931

BM570 CONNECTED IN PARALLEL WITH PRESSURE RELIEF VALVE

Type	A	B	Weight(Kg)
BM570/2	216	200	12,7
BM570/3	291	275	16,8
BM570/4	366	350	21
BM570/5	441	425	25,2
BM570/6	516	500	29,5
BM570/7	591	575	33,6
BM570/8	666	650	37,8

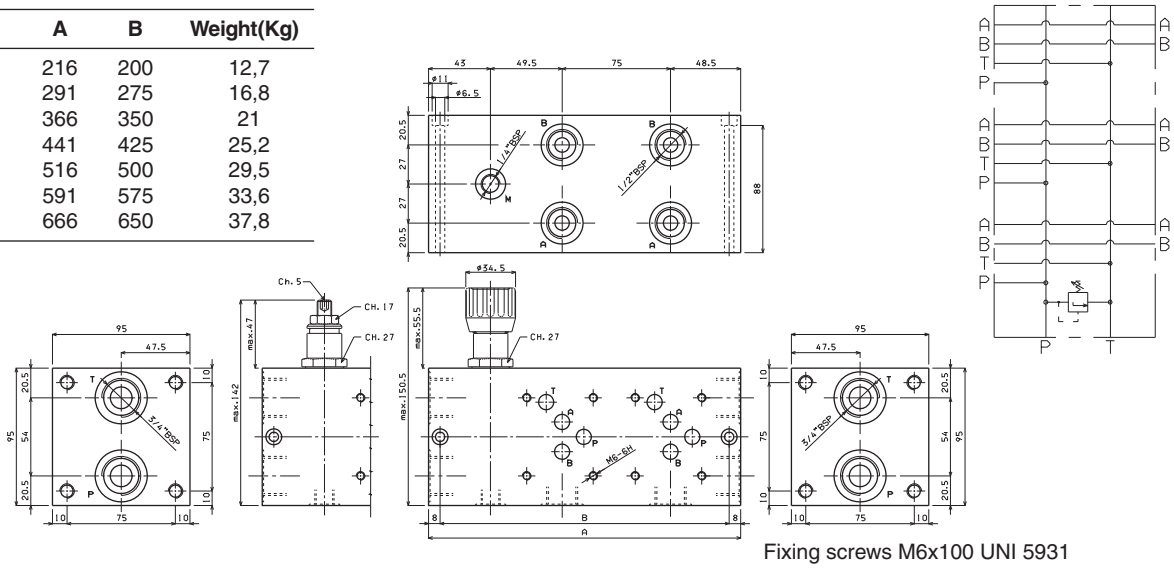

Fixing screws M6x100 UNI 5931

BM580 CONNECTED IN PARALLEL WITH PRESSURE RELIEF VALVE

Type	A	B	Weight(Kg)
BM.5.80/2	225	205	19,5
BM.5.80/3	300	280	26
BM.5.80/4	375	355	32,5
BM.5.80/5	450	430	39
BM.5.80/6	525	505	45,5

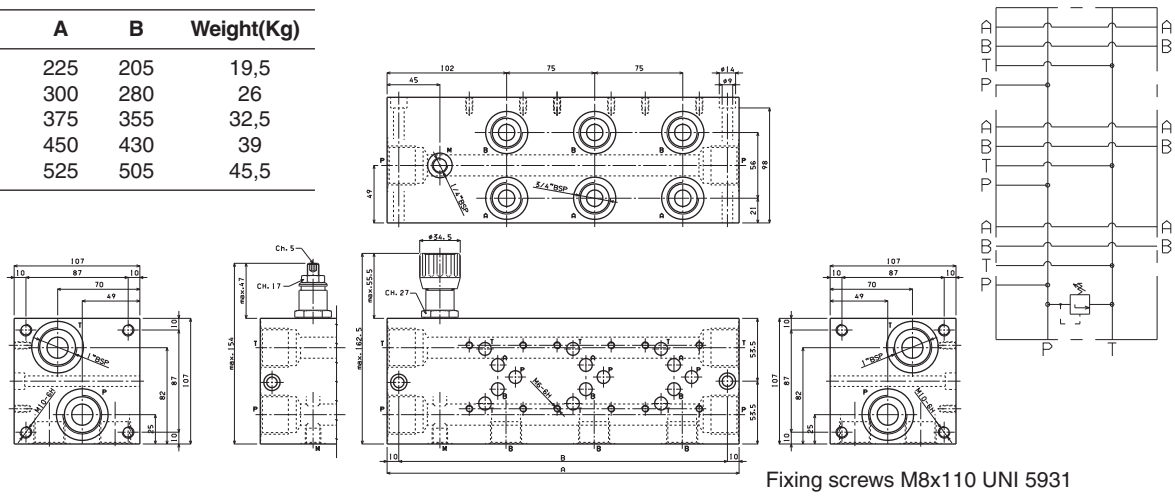

Fixing screws M8x110 UNI 5931

DANA BREVINI Motion Systems