ORDERING CODE

KEL	Logic element 2/2
**	**16** = NG16 **25** = NG25
*	Function: see table 1 Areas ratio: **U** = 1 : 1 **S** = 12.5 : 1 **B** = 2 : 1 (for version with drilled poppet see CF variant) **F** = 2 : 1 **R** = 2 : 1
*	Opening pressure (bar) (Tab.1 pressure values) (Tab.2 spring's colour and code)
**	Calibrated orifices: **00** = blind **08** = 0.8 mm **09** = 0.9 mm **10** = 1.0 mm **12** = 1.2 mm **14** = 1.4 mm
**	**00** = No variant **V1** = Viton **CF** = With drilled poppet only for KEL**B
2	Serial No.

TAB. 1 - SYMBOL, FUNCTION, AREA RATIO AND OPENING PRESSURE

Function	Symbol	Area ratio	Code	Opening pressure (bar)	
				A→B	B→A
Directional (U) (normally used for relief valve)	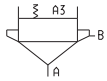	**A1 : A3** 1 : 1	KEL**UL00 KEL**UM00 KEL**UH00 KEL**UJ00	**L** = 0.3 **M** = 1.6 **H** = 4 **J** = 9	
Directional (U) with orifice	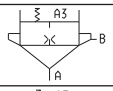	**A1 : A3** 1 : 1	KEL**UL** KEL**UM** KEL**UH**	**L** = 0.3 **M** = 1.6 **H** = 4	
Directional (S)		**A1 : A2** 12.5 : 1	KEL**SL00 KEL**SM00 KEL**SH00	**L** = 0.3 **M** = 0.6 **H** = 1.5	**L** = 4 **M** = 8 **H** = 20
Directional (S) with orifice		**A1 : A2** 12.5 : 1	KEL**SL** KEL**SM** KEL**SH**	**L** = 0.3 **M** = 0.6 **H** = 1.5	**L** = 4 **M** = 8 **H**= 20
Directional (B) (normally used for check valve)		**A1 : A2** 2 : 1	KEL**BL00 KEL**BM00 KEL**BH00	**L** = 0.5 **M** = 1 **H** = 2.5	**L** = 1 **M** = 2 **H** = 5
Flow control (F)		**A1 : A2** 2 : 1	KEL**FL** KEL**FM** KEL**FH**	**L** = 0.5 **M** = 1 **H** = 2.5	**L** = 1 **M** = 2 **H** = 5
With sensitized cover (R)	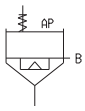	**A1 : A2** 2 : 1	KEL**RL00 KEL**RM00 KEL**RH00 KEL**RJ00	A → B NG16 **L** = 0.7 **M** = 1.5 **H** = 4	 NG25 **L** = 0.6 **M** = 1.5 **H** = 3.5 **J** = 9

TAB. 2 - SPRING'S COLOUR AND CODE

Spring type	U		S		B-F		R	
	NG16	NG25	NG16	NG25	NG16	NG25	NG16	NG25
Cod. **L**	without colour	red	without colour	red	without colour	red	without colour	red
Cod. **M**	green	yellow	red	green	red	green	red	green
Cod. **H**	blue	blue	yellow	yellow	green	yellow	green	yellow
Cod. **J**	without colour							blue

NG 16 PRESSURE DROP

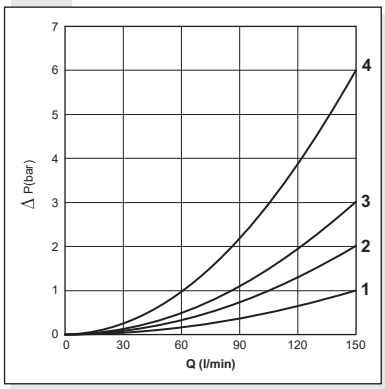

1 = KEL16U
KEL16S
2 = KEL16B
3 = KEL16R
4 = KEL16F

NG25 PRESSURE DROP

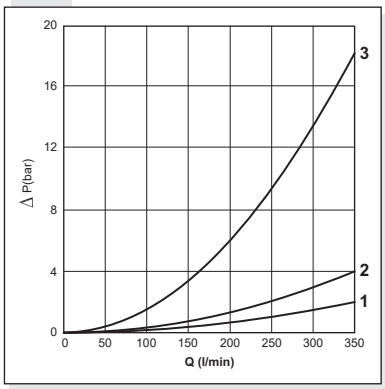

1 = KEL25U
KEL25B
KEL25R
2 = KEL25S
3 = KEL25F

The fluid used is a mineral oil with a viscosity of 46 mm²/s at 40°C. The tests were performed at a fluid temperature of 50°C.

OVERALL DIMENSIONS OF TWO-WAY VALVE SEAT ISO 7368/BA-06-2-A NG16 (DIN 24342)

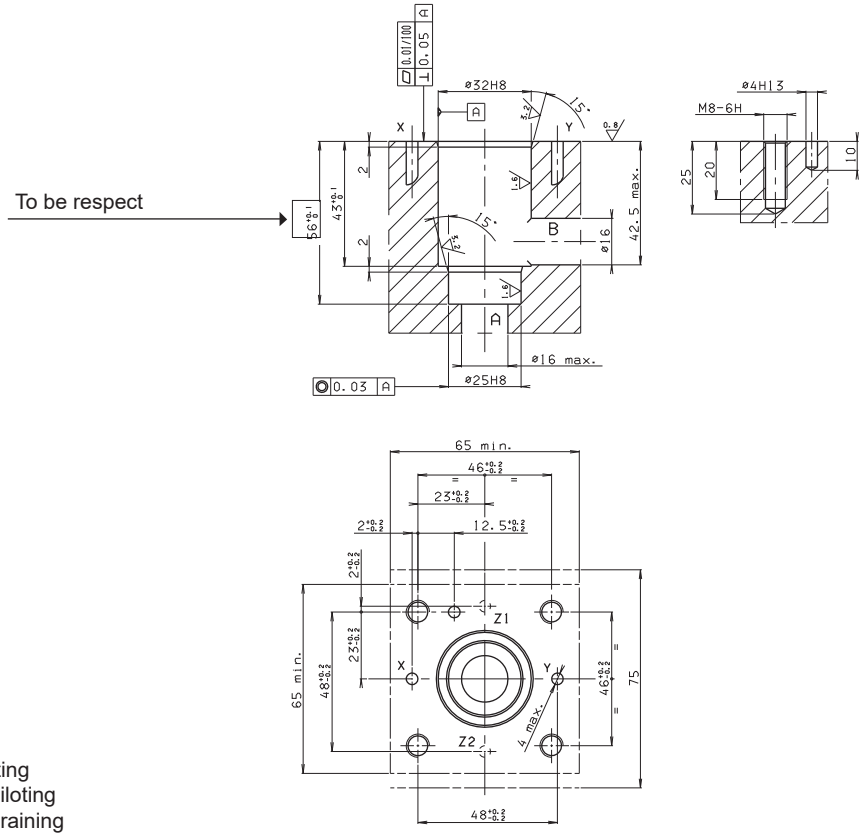

X = piloting
Y = draining
Z = additional piloting
Z1 = preferential piloting
Z2 = preferential draining

OVERALL DIMENSIONS OF TWO-WAY VALVE SEAT ISO 7368/BB-08-2-A NG25 (DIN 24342)

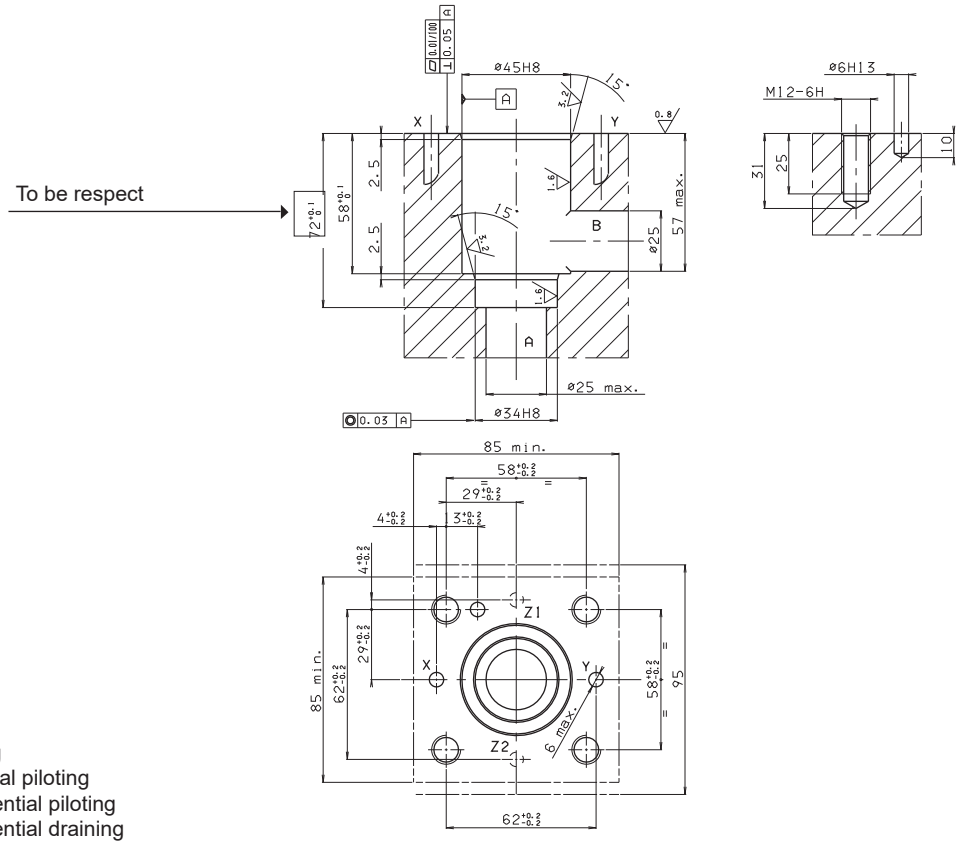

X = piloting
Y = draining
Z = additional piloting
Z1 = preferential piloting
Z2 = preferential draining