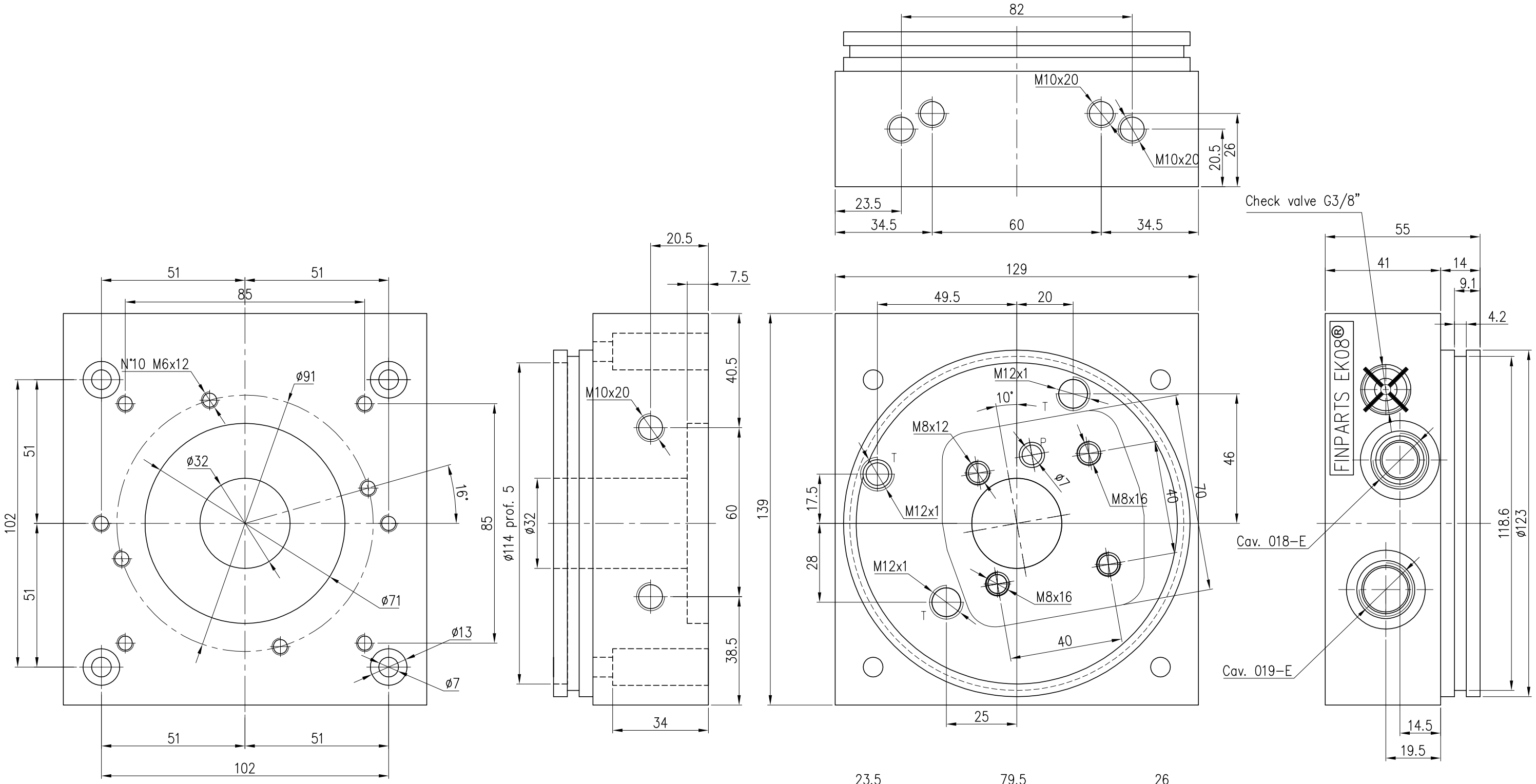

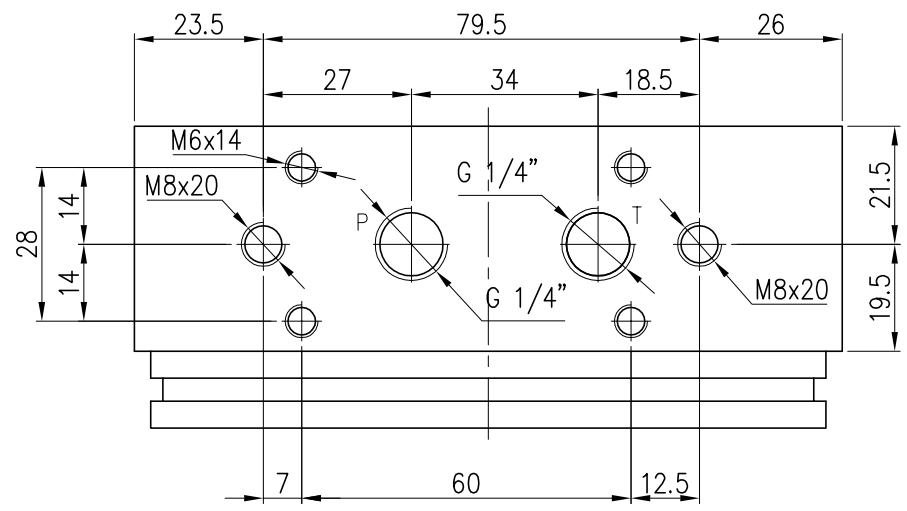

finparts.nl
quality products